TECHNICAL DATA

Dimensions

Dimensions (WxDxH)	26" x 27" x 38.1"
Output (lb/24hr)	280 lbs
Bin Capacity	80 lbs
Net Weight	133 lbs
Gross Weight	148 lbs
Packaging Dimensions (WxDxH)	30.7" x 29.3" x 35.4"
Ice Cube Size half cube	.86"x.86".86"

Cooling

Refrigerant	R290
Temperature Display	Yes
Temperature Controller	Digital
Condeser Unit	Air
Compressor	Secop

Construction

Exterior Material	304 series stainless steel
Interior Material	Polyethylene
Water Filter Capacity	2.2 GPM

Electrical

Voltage	115
Power	726W
Hz	60

C ETL LISTED US Intertek

INTERTEK ETL SANITATION LISTED

COMPLIES WITH ANSI/NSF 7
FOR FOOD SERVICE

PLAN VIEW

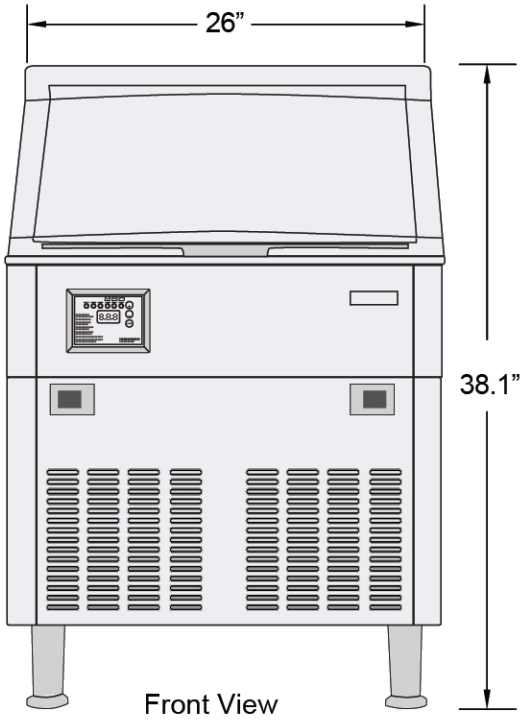

Front View

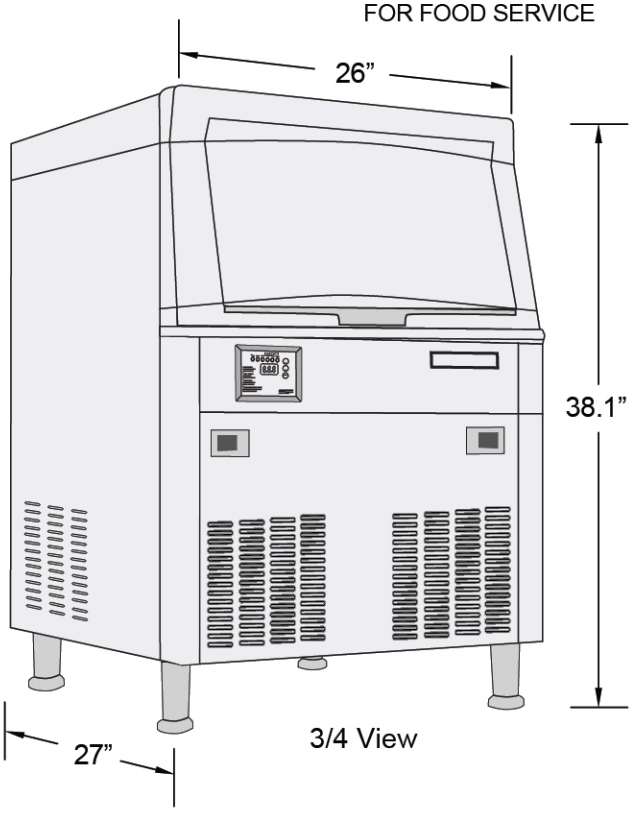

3/4 View

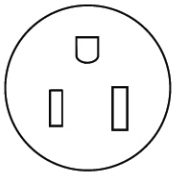

NEMA 5-15P

SUIM-280

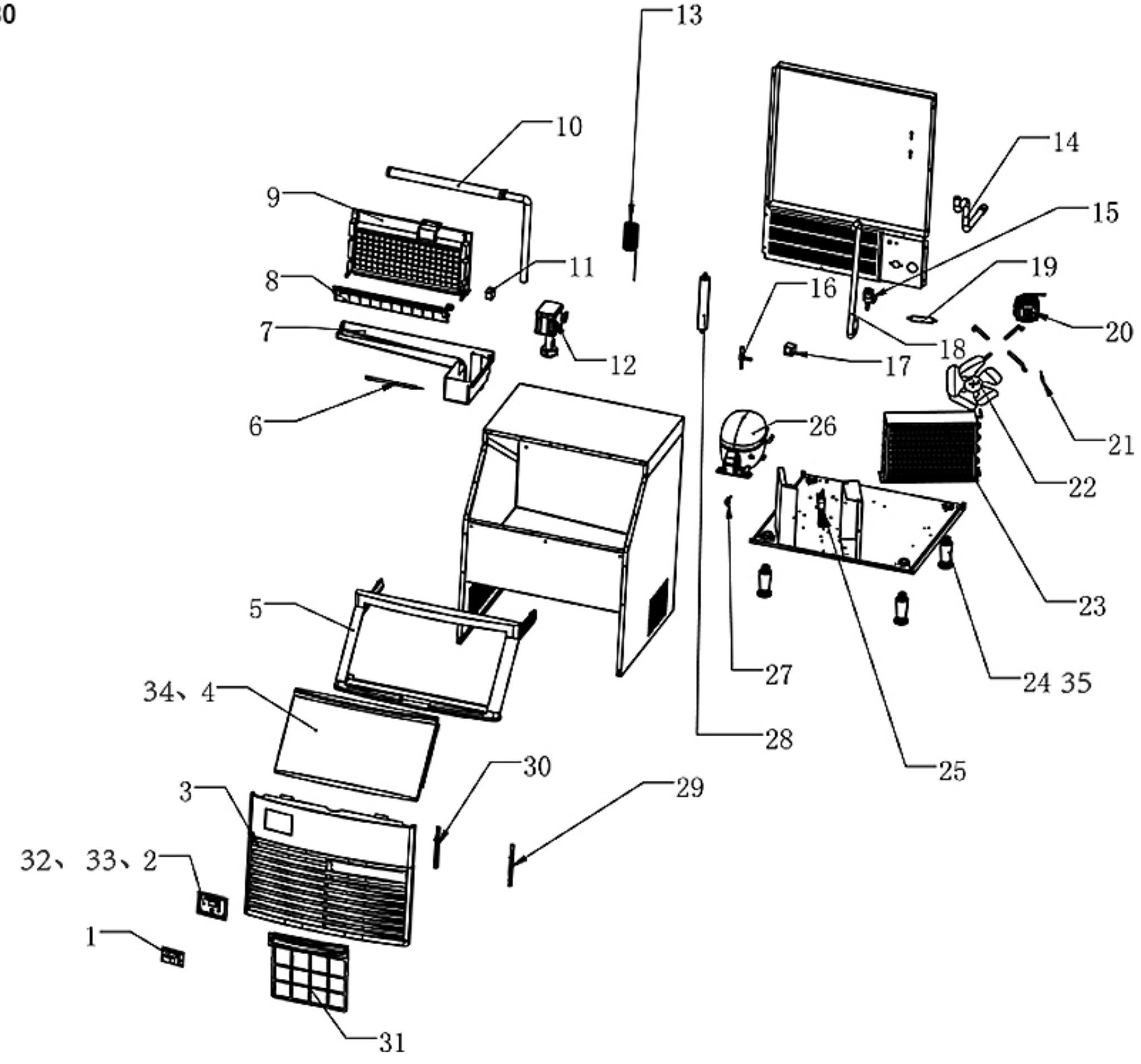
13
10
14
9
15
11
19
8
16
20
7
12
18
17
6
26
21
22
23
5
27
24 35
34、4
28
25
30
29
3
32、33、2
1
31

NO.	Part Name	Factory Part NO.
1	DISPLAY PANEL	03.012.043
2,32,33	CONTROL PANEL	05.004.005
		05.004.006
		18.001.039
3	FRONT VENTILATION WINDOW	05.015.013
4,34	DOOR PANEL ASSEMBLY	05.013.016
		05.013.018
5	DOOR FRAME ASSEMBLY	05.014.009
6	COLD LIGHT	06.017.003
7	SINK	05.001.005
8	SKATEBOARD (PARTS OF EVAPORATOR)	03.004.003
9	EVAPORATOR	03.003.009
10	SPRINKLER TUBE ASSEMBLY (PARTS OF EVAPORATOR)	SL.FB.32480654.00
11	ICE FULL SENSOR	03.013.008
12	WATER PUMP	03.009.005
13	CAPILLARY	02.002.002
14	OFF-BOARD DRAIN	17.009.001
15	INLET VALVE	04.003.010
16	DEFROST VALVE BODY	04.005.003
17	DEFROST VALVE COIL	04.007.006
18	SILICONE HOSE	09.005.003
19	DRY FILTER	02.005.002
20	FAN	03.006.011
21	CONDENSATION SENSOR	04.010.008
22	FAN BLADE	03.007.005
23	CONDENSER	03.005.009
24,35	FOOT ASSEMBLY	17.007.003
		17.007.004
25	PC BOARD	03.011.038
26	COMPRESSOR NLE11MN	03.001.091
27	LED LIGHT REED SWITCH MAGNETIC SWITCH	06.016.005
28	GAS-LIQUID SEPARATOR	02.003.008
29	FILTER RIGHT CARD SLOT	05.016.024
30	FILTER LEFT CARD SLOT	05.016.023
31	VENTILATION WINDOW FILTER	05.016.022